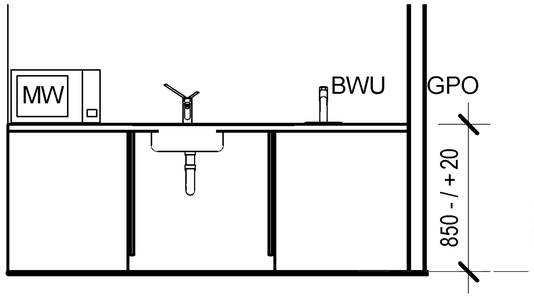

OPTION 5 ELEVATION 1

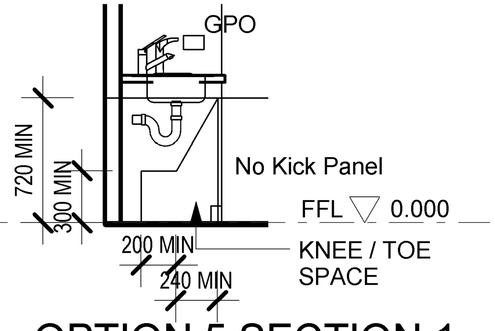

OPTION 5 SECTION 1

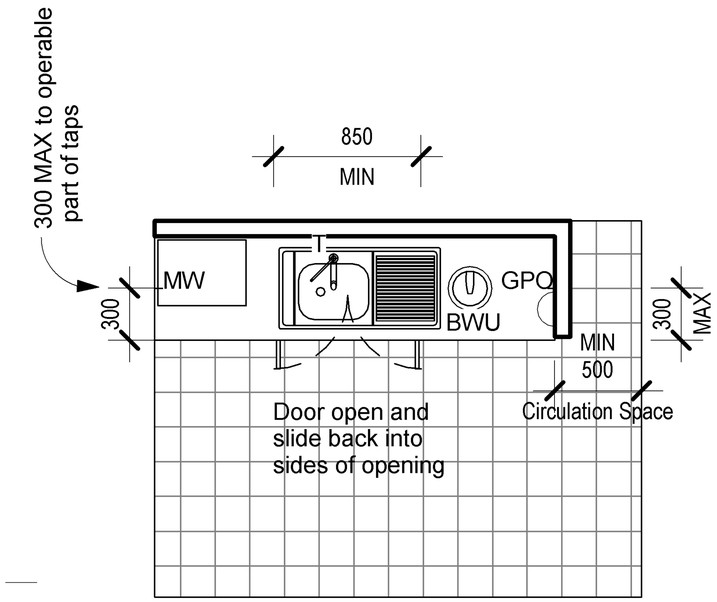

TEA POINT OPTION 5 PLAN

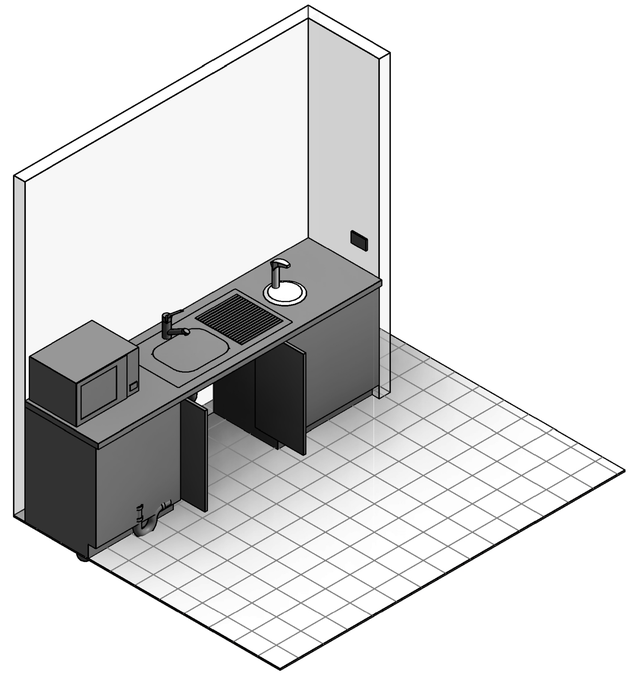

TEA POINT OPTION 5

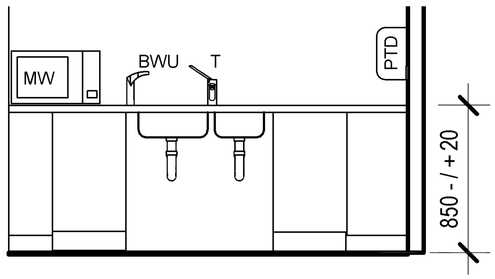

OPTION 6 ELEVATION 1

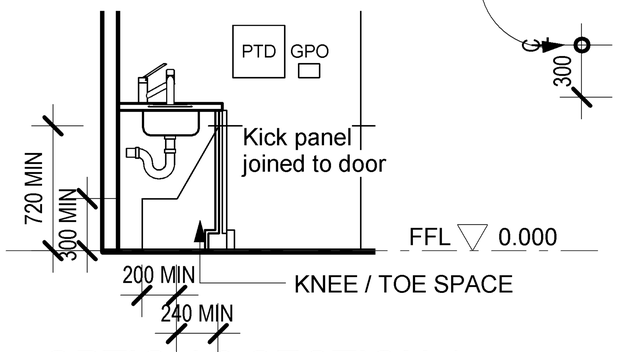

OPTION 6 SECTION 1

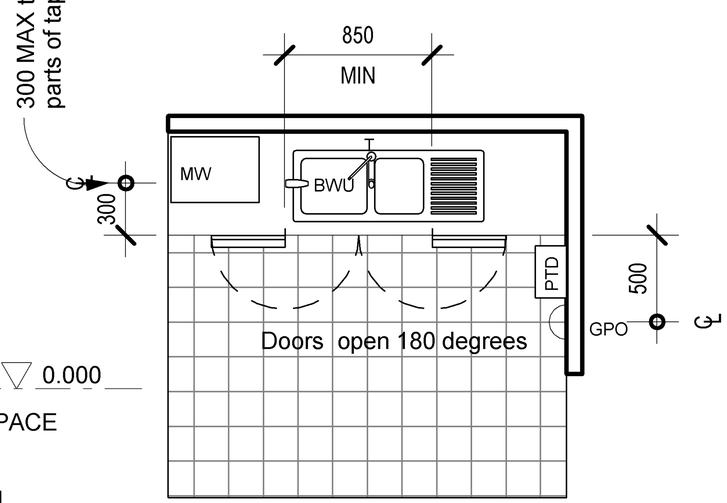

TEA POINT OPTION 6 PLAN

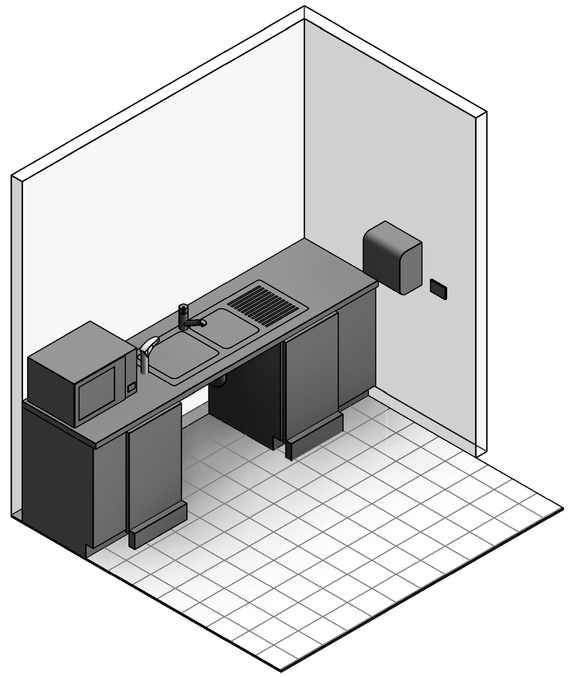

TEA POINT OPTION 6

LEGEND

BWU BOILING WATER UNIT (USUALLY WITH CHILLED WATER)
PTD PAPER TOWEL DISPENSER
MW MICROWAVE
GPO GENERAL PURPOSE OUTLET
S SINK
T TAP
R REFRIGERATOR

.

NOTE: MINIMUM KNEE / TOE SPACE SHOWN
A DEEPER RECESS IS PREFERRED.

ACCESSIBLE TEA POINT SHEET 3

11 / 08 / 2014