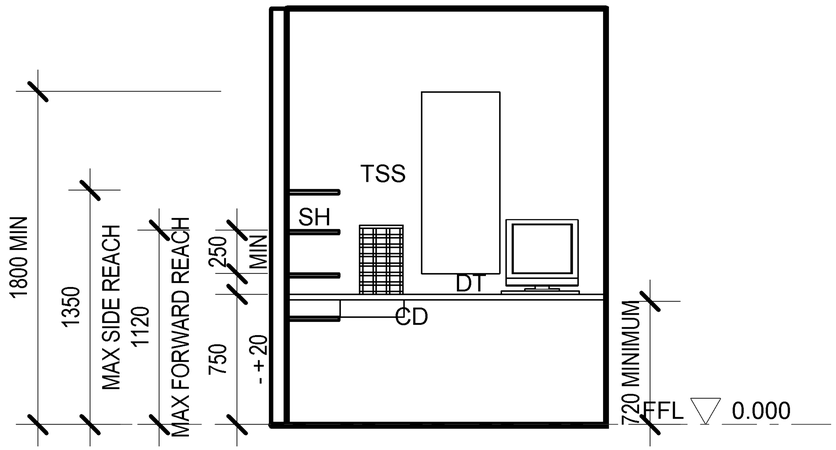

ELEVATION

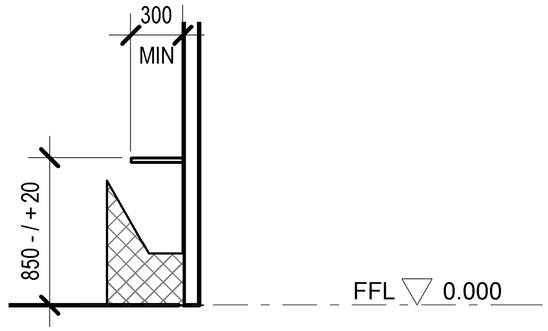

SECTION CUSTOMER

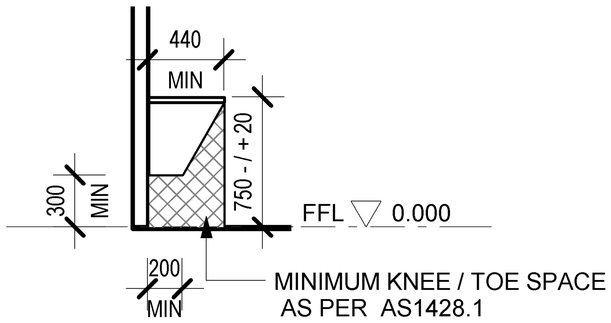

SECTION STAFF

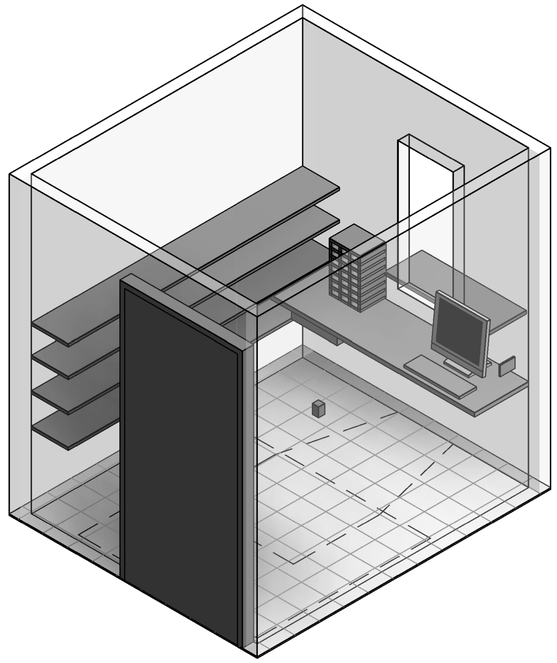

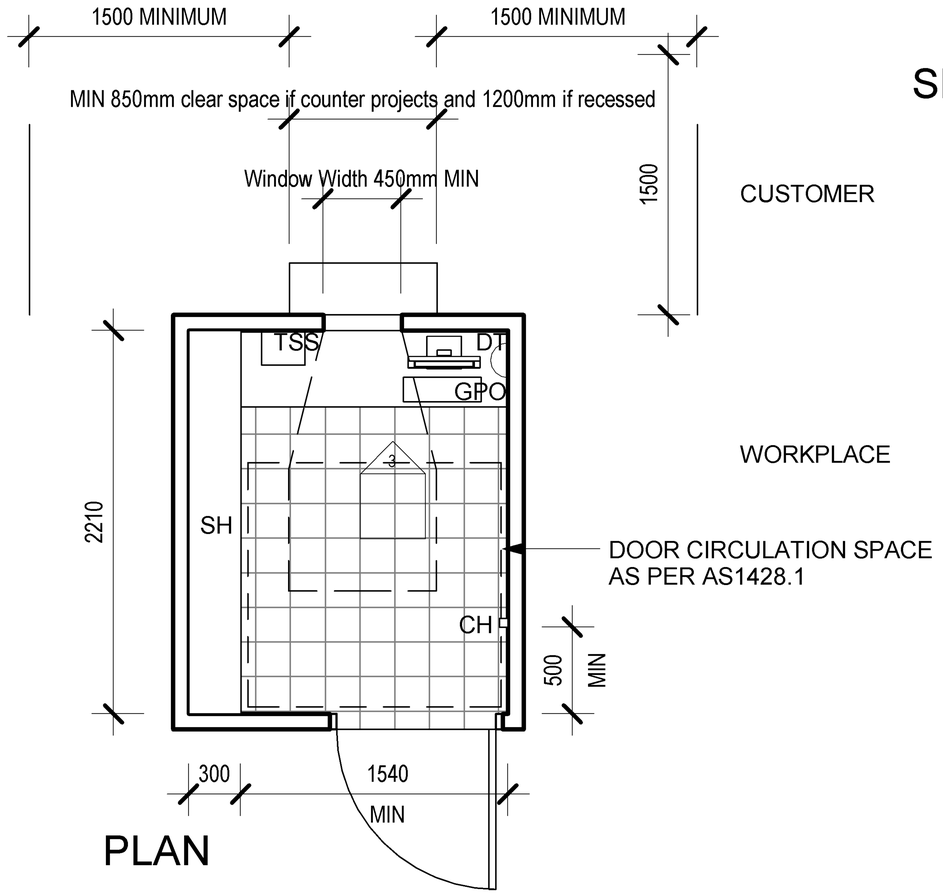

PLAN

LEGEND

SH	SHELVING
TSS	TICKET SLOT SHELVES
CD	CASH DRAWER
GPO	POWER POINT
DT	DESK TOP
CH	COAT HOOK

ACCESSIBLE TICKET OFFICE

13 / 08 / 2014